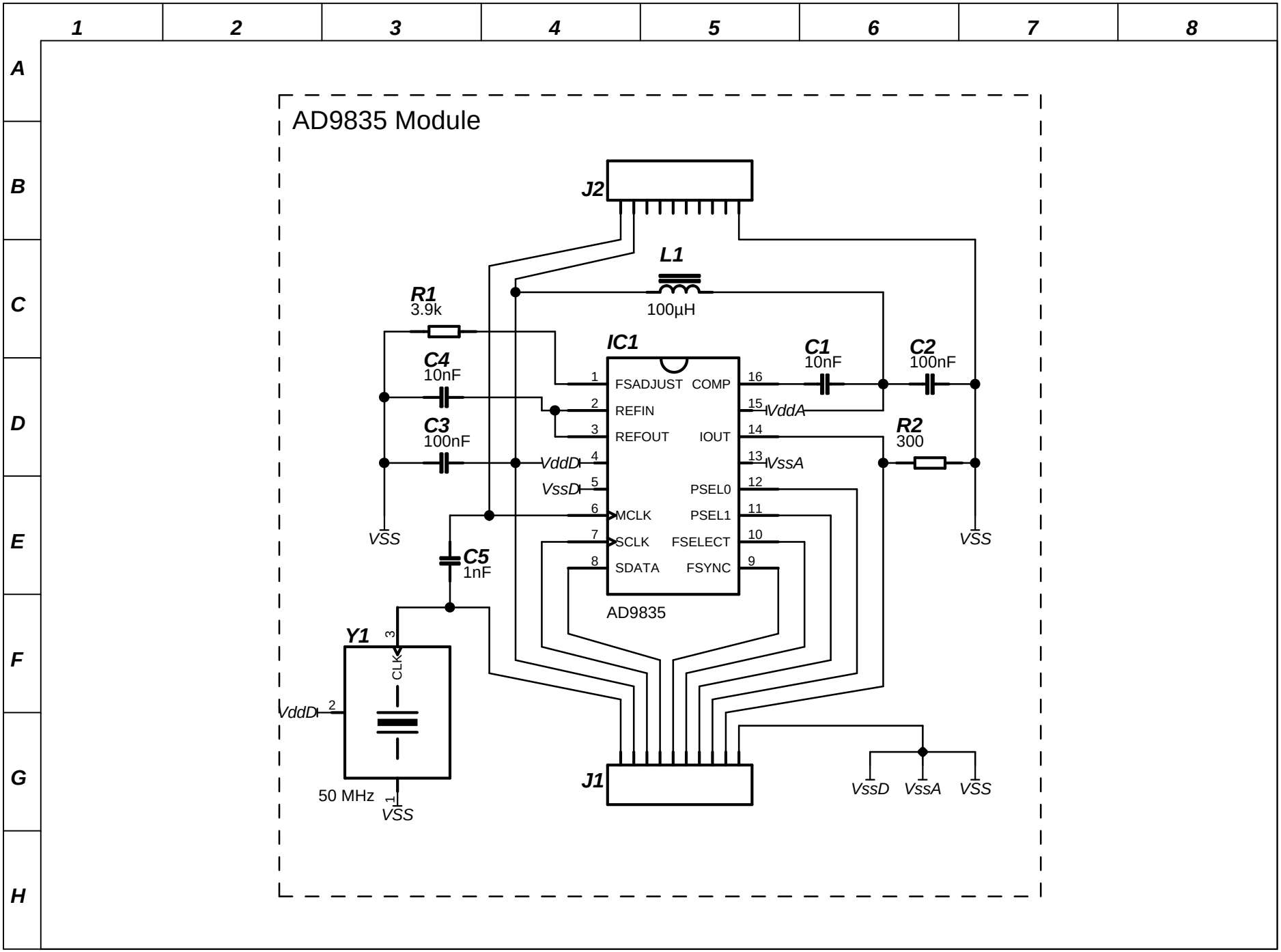
AD9835 Module
J2
L1
100µH
R1
3.9k
C4
10nF
C3
100nF
IC1
C1
10nF
C2
100nF
R2
300
FSADJUST
COMP
REFIN
VddA
REFOUT
IOUT
VddD
VssA
VssD
PSEL0
MCLK
PSEL1
SCLK
FSELECT
SDATA
FSYNC
AD9835
VSS
C5
1nF
Y1
CLK
VddD
50 MHz
J1
VssD
VssA

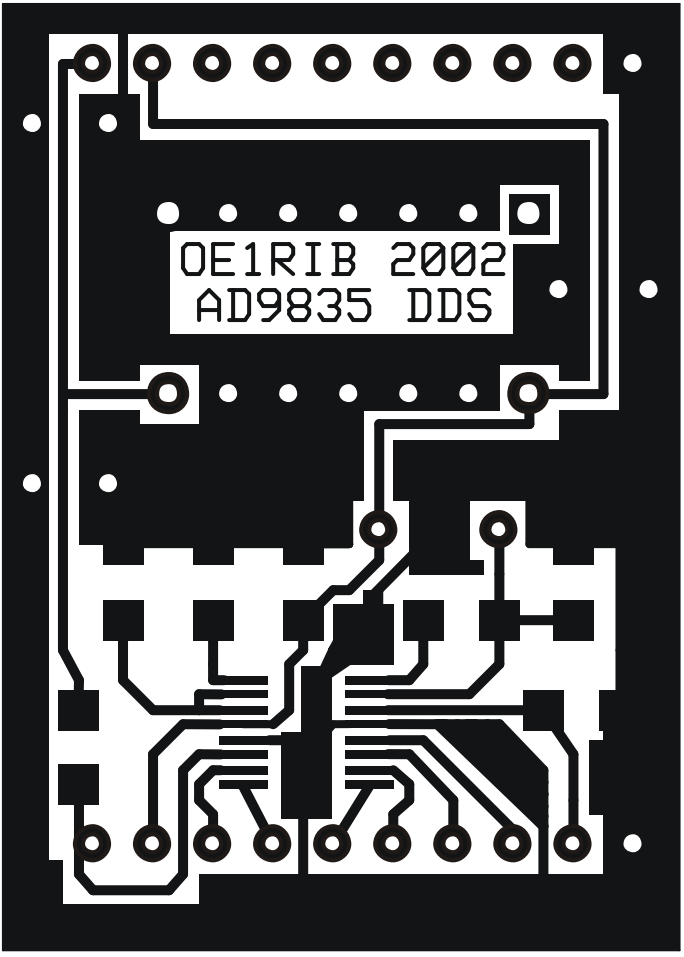
OE1RIB 2002
AD9835 DDS