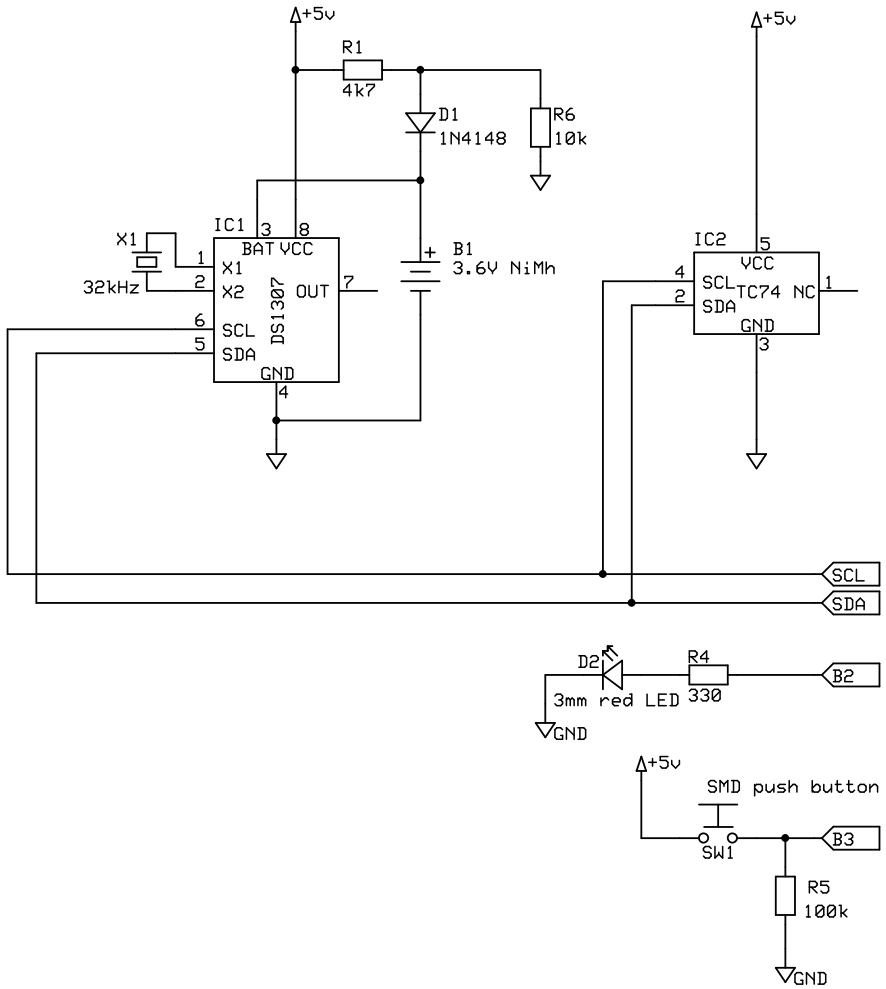

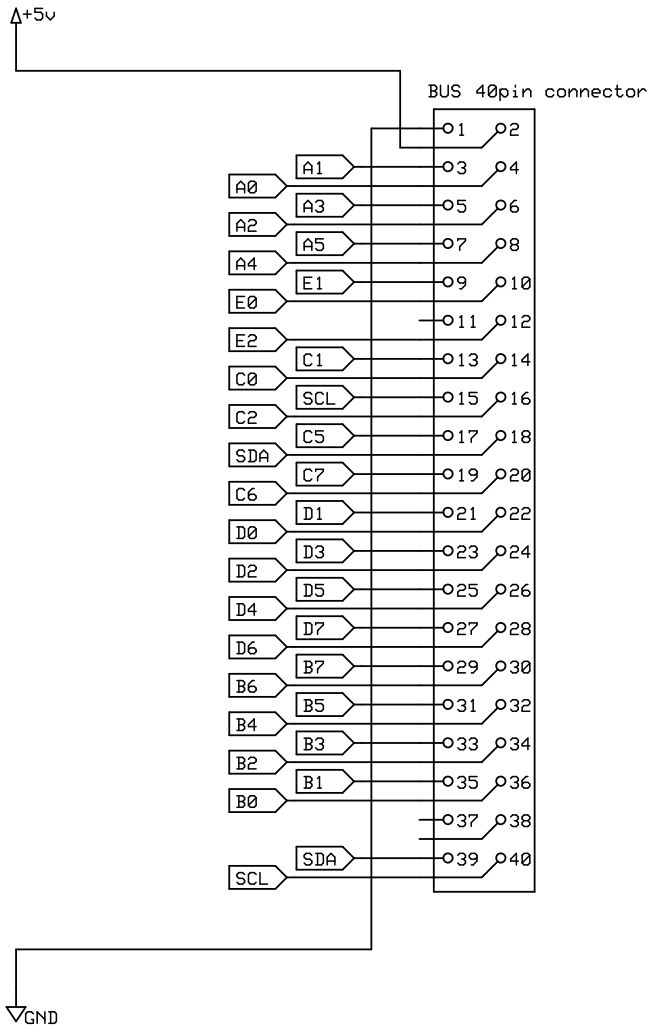

www.MIN.at		
SSTV Digital		
Richard Prinz	Rev 1.5 26.09.2009	Page 1

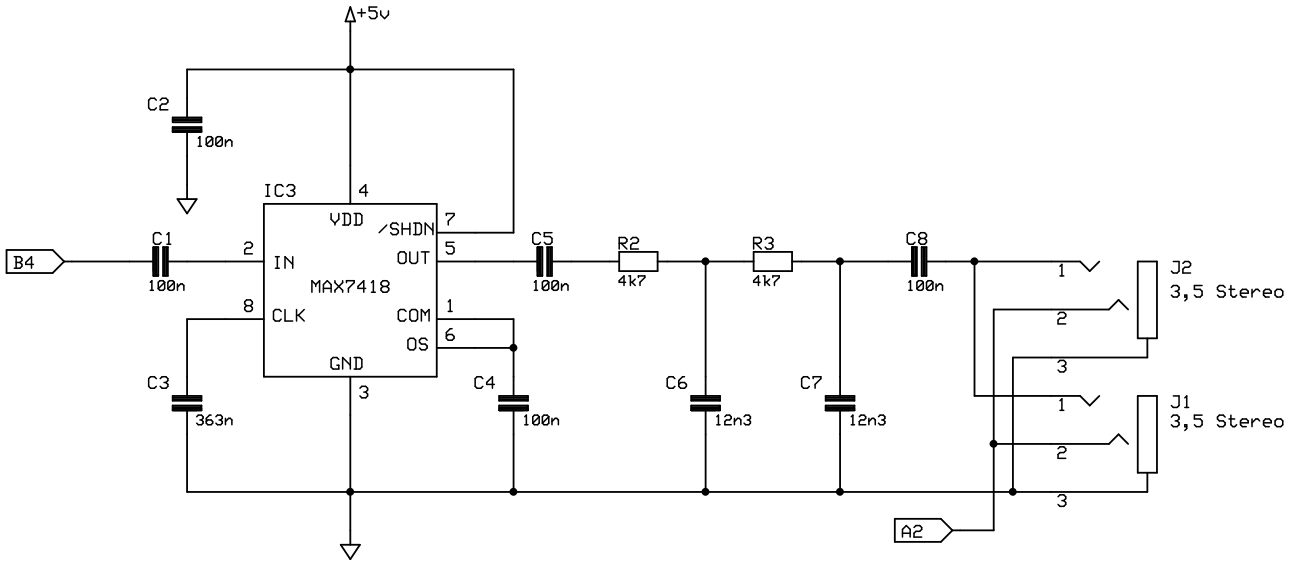

www.MIN.at		
SSTV Analog		
Richard Prinz	Rev 1.5 26.11.2009	Page 2

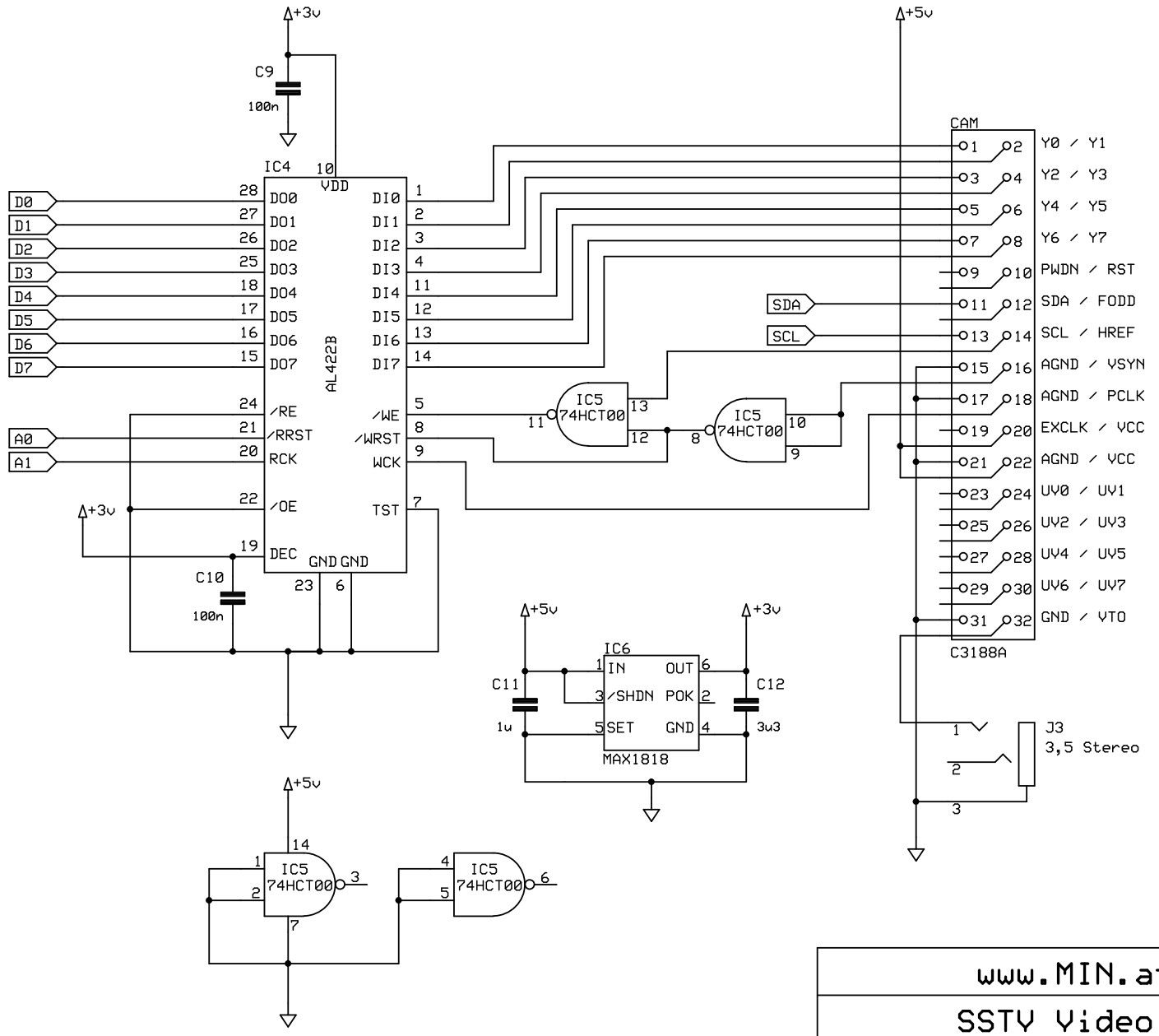

www.MIN.at		
SSTV Video		
Richard Prinz	Rev 1.5 26.11.2009	Page 3

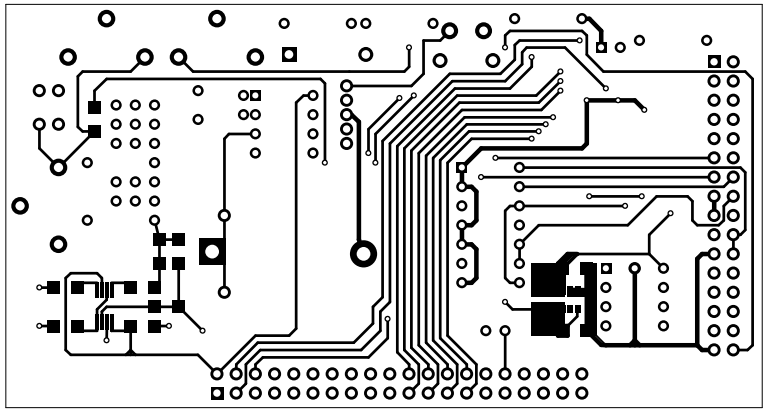

DEIKIB ÚBR-CPM
(c) www.MIN.sk
2005 v.1

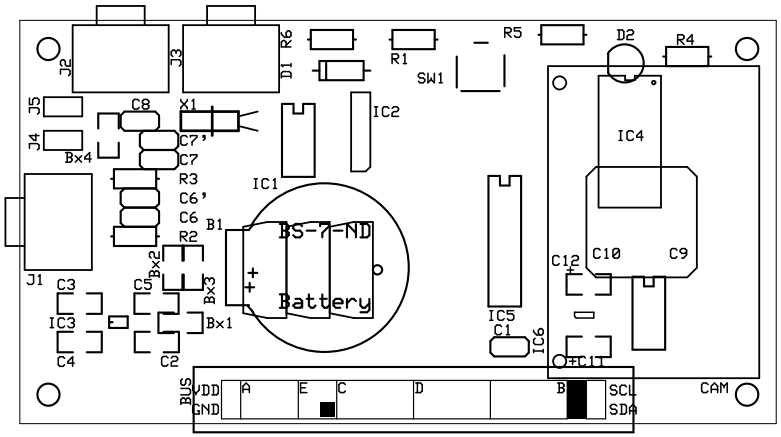
J2
J3
R6
D1
R1
R5
D2
R4
SW1
J5
C8
X1
IC2
IC4
J4
Bx4
C7'
C7
R3
IC1
C6'
C6
B1
R2
BS-7-ND
Battery
Bx2
Bx3
J1
C3
C5
IC3
Bx1
C4
C2
IC5
C1
IC6
C12
C10
C9
C11
BUS
VDD
GND
A
E
C
D
B
SCL
SDA
CAM

B1	3.6V NiMh
BUS	40pin connector
C1	100n
C2	100n
C3	363n
C4	100n
C5	100n
C6	12n3
C7	12n3
C8	100n
C9	100n
C10	100n
C11	1u
C12	3u3
CAM	C3188A
D1	1N4148
D2	3mm red LED
IC1	DS1307
IC2	TC74
IC3	MAX7418
IC4	AL422B
IC5	74HCT00
IC6	MAX1818
J1	3,5 Stereo
J2	3,5 Stereo
J3	3,5 Stereo
R1	470
R2	4k7
R3	4k7
R4	330
R5	100k
SW1	SMD push button
X1	32kHz